DUE THE TOOLING DESIGN, THE BAFFLE CAN BE ON BOTH SIDES, NOT EFFECTING THE FUNCTION IS QUALIFIED.
因模具排列設計之故,擋板左右方向皆可,不影響功能屬為合格品.

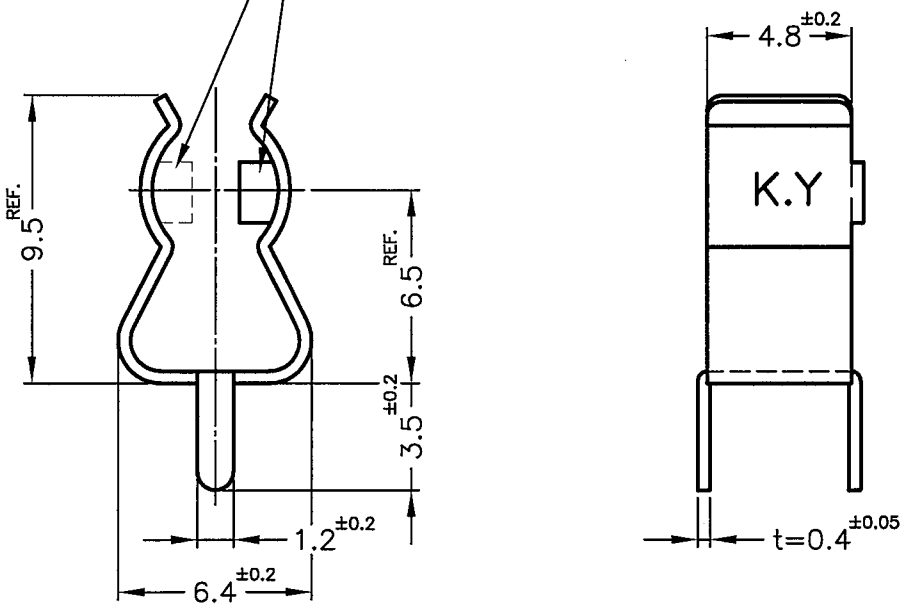

PS:FOR FUSE ø5.2

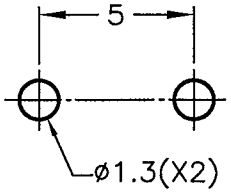

HOUNTING HOLE

NOTE: 1. THE BEST USE TIME OF TIN PLATING PARTS ARE WITHIN 3 MONTHS SINCE MFG DATE.
鍍錫最佳使用時間,為製造日起3個月內.
2. FINISH: TIN PLATED. IF PARTS ARE NOT USED UP PLEASE STORE IN A SEAL BAG.
表面為鍍錫,未使用完畢時,產品請密封.

康揚企業股份有限公司
KANG YANG HARDWARE ENTERPRISE CO., LTD.
康揚塑膠(東莞)有限公司
KANG YANG PLASTIC(DONG GUAN)CO.,LTD.
康哲電腦配件(吳江)有限公司
KANG CHE COMPUTER COMPONENTS(WUJIANG)CO.,LTD.
ISO 9001
ISO 14001
QC 080000
IATF 16949

PROPRIETARY AND CONFIDENTIAL
THE INFORMATION CONTAINED IN THIS DRAWING IS THE SOLE PROPERTY OF KANG YANG HARDWARE ENTERPRISE CO. ANY REPRODUCTION IN PART OR AS A WHOLE WITHOUT THE WRITTEN PERMISSION OF KANG YANG HARDWARE ENTERPRISE CO. IS PROHIBITED.

DO NOT SCALE DRAWING

DATE 2005.08.18	TITLE FUSE HOLDER	DWG. NO. FUC-02	PART NO. FUC-02
DRAWN Syman	MATERIAL BRASS		
CHECKED 林祺翔	FINISH BRIGHT TIN PLATED	SIZE A4	SPEC. DWG.	REV B
APPROVED	UNLESS OTHERWISE SPECIFIED TOLERANCE: SEE ABOVE	SCALE: 4:1	UNIT mm	SHEET 1 OF 1