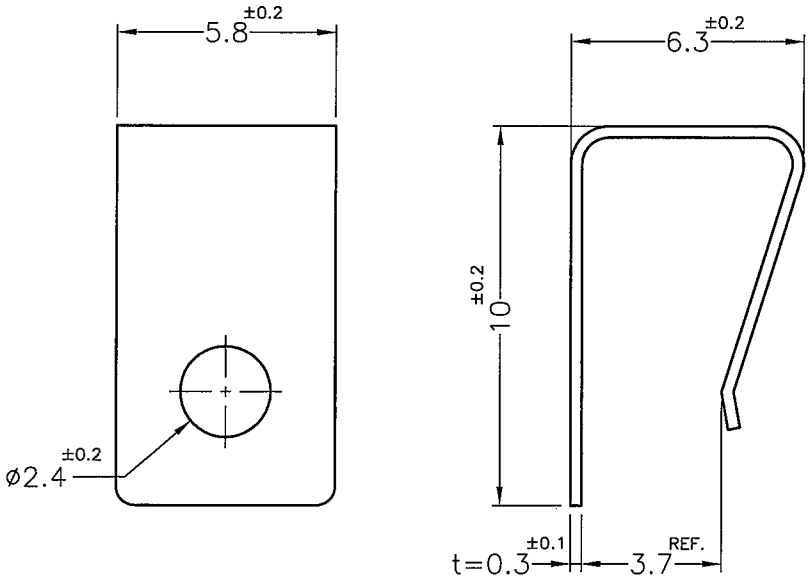

NOTE:SHRINKING IS NORMAL STATUS.
內縮為正常現象.

康揚企業股份有限公司
KANG YANG HARDWARE ENTERPRISE CO., LTD.
康揚塑膠(東莞)有限公司
KANG YANG PLASTIC(DONG GUAN)CO.,LTD.
康哲電腦配件(吳江)有限公司
KANG CHE COMPUTER COMPONENTS(WUJIANG)CO.,LTD.
ISO 9001
ISO 14001
QC 080000
IATF 16949

PROPRIETARY AND CONFIDENTIAL
THE INFORMATION CONTAINED IN THIS DRAWING IS THE SOLE PROPERTY OF KANG YANG HARDWARE ENTERPRISE CO. ANY REPRODUCTION IN PART OR AS A WHOLE WITHOUT THE WRITTEN PERMISSION OF KANG YANG HARDWARE ENTERPRISE CO. IS PROHIBITED.

DO NOT SCALE DRAWING

DATE: 2006.06.27	TITLE: TRANSISTOR CLAMP	DWG. NO.: TRMC-20	PART NO.: TRMC-20
DRAWN: BUNNY	MATERIAL: SUS		
CHECKED: 李柏宥	COLOR:	FINISH:	SIZE: A4 — SPEC. DWG — REV: A
APPROVED: Kang	UNLESS OTHERWISE SPECIFIED TOLERANCE: SEE ABOVE		SCALE: 5:1 — UNIT: mm — SHEET 1 OF 1