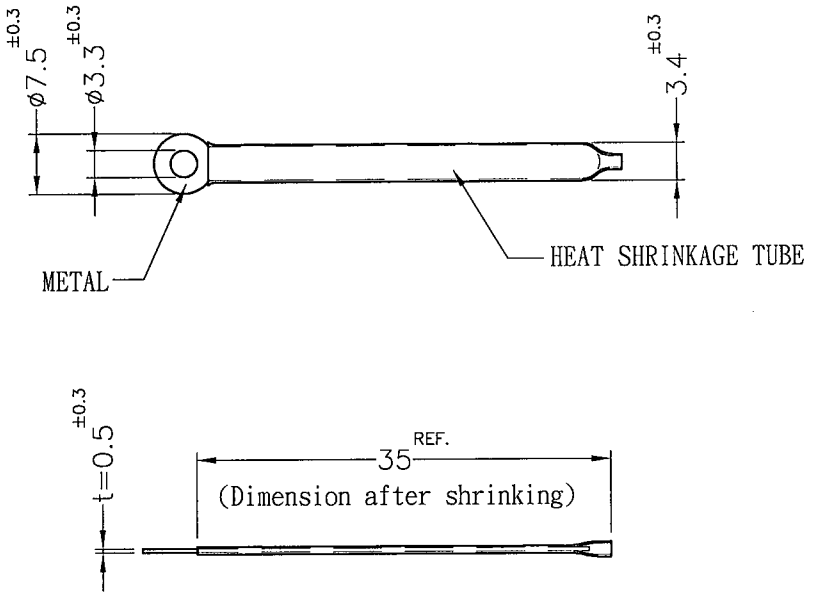

NOTE: 1. THE MEASURED VALUE DOESN'T INCLUDED TUBE.
測量值不包含套管.
2. IT IS NORMAL IF THERE IS OXIDATION ON THE CROSS-SECTION AND DIFFERENT COLOR BETWEEN CROSS-SECTION AND SURFACE.
橫截面氧化屬於正常現象，並且橫截面和表面可能會有色差.
3. TRIMMED BY HAND, IT MIGHT NOT BE SMOOTH.
此為手工裁切,切斷面無法非常平整.

康揚企業股份有限公司
KANG YANG HARDWARE ENTERPRISE CO., LTD.
康揚塑膠(東莞)有限公司
KANG YANG PLASTIC(DONG GUAN)CO.,LTD.
康哲電腦配件(吳江)有限公司
KANG CHE COMPUTER COMPONENTS(WUJIANG)CO.,LTD.
ISO 9001
ISO 14001
QC 080000
IATF 16949

PROPRIETARY AND CONFIDENTIAL
THE INFORMATION CONTAINED IN THIS DRAWING IS THE SOLE PROPERTY OF KANG YANG HARDWARE ENTERPRISE CO. ANY REPRODUCTION IN PART OR AS A WHOLE WITHOUT THE WRITTEN PERMISSION OF KANG YANG HARDWARE ENTERPRISE CO. IS PROHIBITED.

DO NOT SCALE DRAWING

DATE 2003.07.03	TITLE WIRE CLAMP	DWG. NO. WL3-32H	PART NO. WL3-32H
DRAWN S.J.C.	METAL / PLASTIC MATERIAL STEEL / POLYOLEFIN(UL)		
CHECKED Yuping	PLASTIC COLOR BLACK / FINISH	SIZE A4	SPEC. DWG. / REV B
APPROVED Kang	UNLESS OTHERWISE SPECIFIED TOLERANCE: SEE ABOVE	SCALE: NONE / UNIT mm	SHEET 1 OF 1