REVISIONS			
REV	DESCRIPTION	DATE	BY

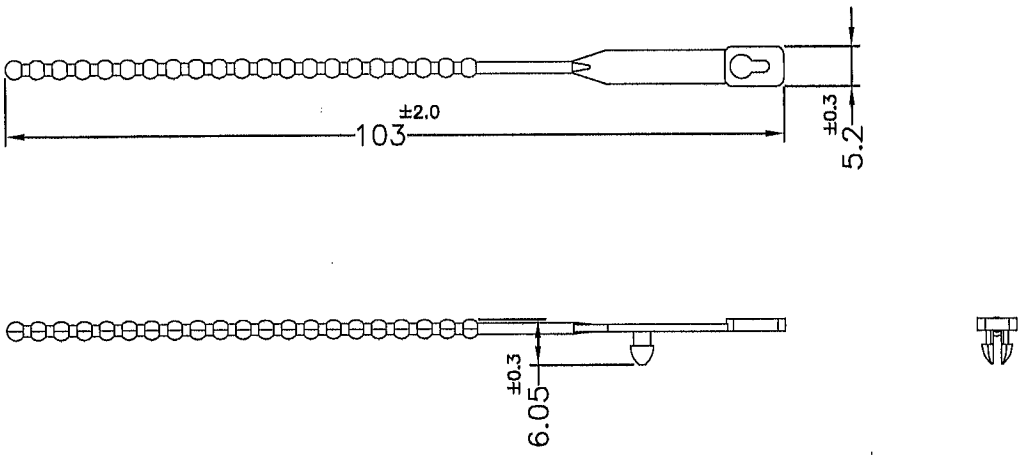

CHASSIS:ø3.0
THICKNESS:0.6~1.8

NOTE:MADE OF EQUIVALENT MATERIAL.
可使用同等材質

康揚企業股份有限公司 KANG YANG HARDWARE ENTERPRISE CO., LTD. 康揚塑膠(東莞)有限公司 KANG YANG PLASTIC(DONG GUAN)CO.,LTD. 康哲電腦配件(吳江)有限公司 KANG CHE COMPUTER COMPONENTS(WUJIANG) CO.,LTD. ISO 9001 ISO 14001 QC 080000	TITLE STRAP TIES		SPEC. DWG
	MATERIAL NYLON 66 UL94V-2		DATE 2009.08.04
	FINISH		DRAWN Eric
PART NUMBER GTB-103(B)	DRAWING NUMBER GTB-103	COLOR BLACK	CHECK 林益建
SIZE A4 / SCALE 1:1	UNIT mm / REV B	UNLESS OTHERWISE SPECIFIED TOLERANCE SEE ABOVE	APPROVED