| 成型尺寸 | 公差 |
|---|---|
| 5mm以下 | ±0.2 |
| 5~20mm | ±0.3 |
| 20~40mm | ±0.4 |
| 40~60mm | ±0.5 |
| 60~100mm | ±0.8 |
| 100mm以上 | ±1.0 |

| REVISIONS | | | |
|---|---|---|---|
| REV | DESCRIPTION | DATE | BY |
| | | | |
| | | | |

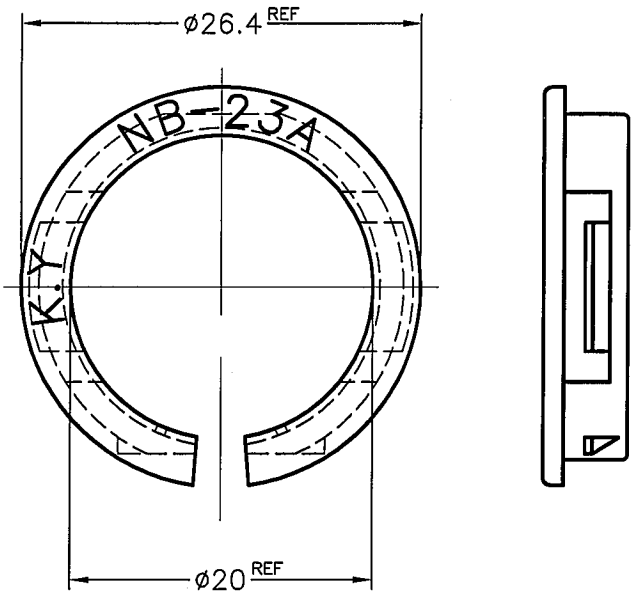


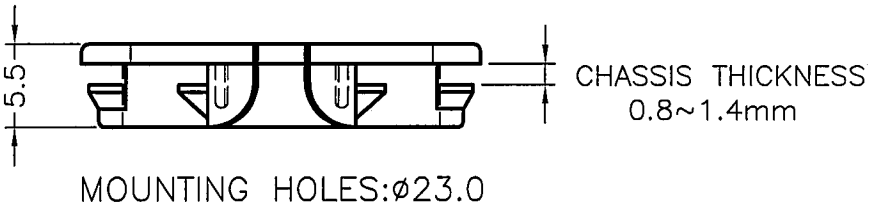


Component - Plastics E41938

E I DUPONT DE NEMOURS & CO INC
ENGINEERING POLYMERS, CHESTNUT RUN PLAZA, PO BOX 80713, WILMINGTON DE 19880

101(r9)(f1), 101F(r9)(f1), 101L(r9)(f1), E101(r9)(f1), E101L(r9)(f1)
Polyamide 66 (PA66), "Zytel", furnished as pellets

| Color | Min Thk (mm) | Flame Class | HWI | HAI | RTI Elec | RTI Imp | RTI Str |
|---|---|---|---|---|---|---|---|
| ALL | 0.71 | V-2 | 4 | 0 | 130 | 75 | 85 |
| | 1.5 | V-2 | 3 | 0 | 130 | 75 | 85 |
| | 3.0 | V-2 | 2 | 0 | 130 | 75 | 85 |
| | 6.0 | V-2 | 2 | 0 | 130 | 75 | 85 |

Comparative Tracking Index (CTI): 0
Dielectric Strength (kV/mm): 13
High-Voltage Arc Tracking Rate (HVTR): 0
Dimensional Stability (%): -
Inclined Plane Tracking (IPT): -
Volume Resistivity ($10^x$ ohm-cm) : 14
High Volt, Low Current Arc Resis (D495): 6

(f1) - Suitable for outdoor use with respect to exposure to Ultraviolet Light, Water Exposure and Immersion in accordance with UL 746C.

NOTE - (1) Material designations that are color pigmented may be followed by suffix letters and numbers. (2) Material designations may be prefixed by "ZYT" for Zytel or "MIN" for Minlon or "DEL" for Delrin or "CRA" for Crastin or "RYN" for Rynite or "ETPV" for ETPV grades.

r9 - Virgin and regrind up to 50% by weight inclusive, have the same basic material characteristics for ALL colors down to 0.71mm. For thickness 0.40mm to 0.70mm the same basic material characteristics exist with the exception of generic RTIs for all properties and Regrind exceeding 25% is limited to V-2 Flammability for WT, RD, BK.

ANSI/UL 94 small-scale test data does not pertain to building materials, furnishings and related contents. ANSI/UL 94 small-scale test data is intended solely for determining the flammability of plastic materials used in the components and parts of end-product devices and appliances, where the acceptability of the combination is determined by UL.

Report Date: 1996-07-29
Last Revised: 2010-07-27

© 2011 Underwriters Laboratories Inc.

c UL us

康揚企業股份有限公司
KANG YANG HARDWARE ENTERPRISE CO., LTD.
康揚塑膠(東莞)有限公司
KANG YANG PLASTIC(DONG GUAN )CO.,LTD.
康哲電腦配件(吳江)有限公司
KANG CHE COMPUTER COMPONENTS(WUJIANG) CO.,LTD.
ISO 9001
ISO 14001
QC 080000

| | | | |
|---|---|---|---|
| TITLE | 開口式護線環 | 產品規格圖面 | |
| MATERIAL | NYLON 66 UL94V-2 | DATE | 2004.10.01 |
| FINISH | | DRAWN | JASON |
| COLOR | BLACK | CHECK | 朱益霆 |
| UNLESS OTHERWISE SPECIFIED TOLERANCE | SEE ABOVE | APPROVED | Kang |

| PART NUMBER | DRAWING NUMBER | | |
|---|---|---|---|
| NB-23A | NB-23AH | | |
| SIZE A4 | SCALE 2:1 | UNIT mm | REV C |