Patented Product
專利產品

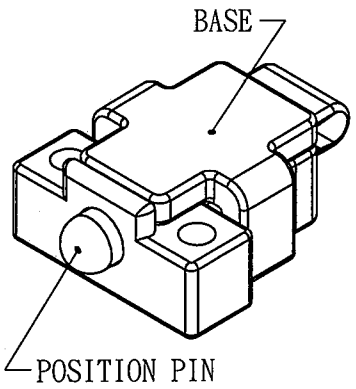

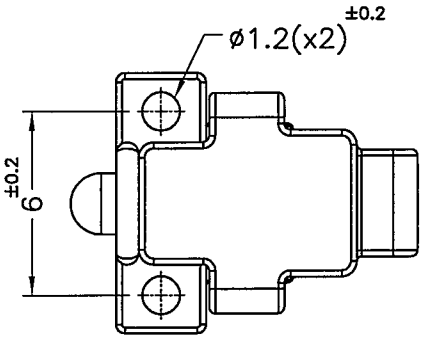

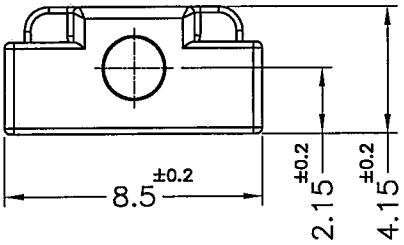

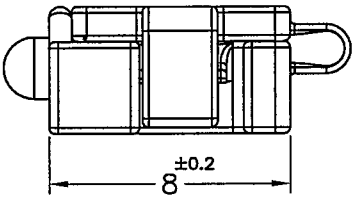

NOTED	MATERIAL	COLOR	FINISH
BASE	NYLON 66 UL94V-2	BLACK	
POSITION PIN	POM UL94HB	BLACK	
SPRING	SWP		NICKLE PLATED

NOTE: 1. MADE OF EQUIVALENT MATERIAL.
均可使用同等材質.
2. SLIGHT DEFORMED IS NORMAL STATUS.
輕微變形為正常現象.
3. THE COLOR BATCH TEST REPORT IS ONLY FOR FIRST LOT TEST.
色母環保檢測報告,僅提供原始測試報告.

康揚企業股份有限公司
KANG YANG HARDWARE ENTERPRISE CO., LTD.
康揚塑膠(東莞)有限公司
KANG YANG PLASTIC(DONG GUAN)CO.,LTD.
康哲電腦配件(吳江)有限公司
KANG CHE COMPUTER COMPONENTS(WUJIANG)CO.,LTD.
ISO 9001
ISO 14001
QC 080000
IATF 16949

PROPRIETARY AND CONFIDENTIAL
THE INFORMATION CONTAINED IN THIS DRAWING IS THE SOLE PROPERTY OF KANG YANG HARDWARE ENTERPRISE CO. ANY REPRODUCTION IN PART OR AS A WHOLE WITHOUT THE WRITTEN PERMISSION OF KANG YANG HARDWARE ENTERPRISE CO. IS PROHIBITED.

DO NOT SCALE DRAWING

DATE 2016.10.21	TITLE SPRING POSITION MOUNT	DWG. NO. DTB-1F	PART NO. DTB-1(B)F
DRAWN K.W	MATERIAL SEE ABOVE		
CHECKED Kenny	COLOR SEE ABOVE / FINISH SEE ABOVE	SIZE A4	SPEC. DWG	REV A
APPROVED Kang	UNLESS OTHERWISE SPECIFIED TOLERANCE: SEE ABOVE	SCALE: 4:1	UNIT mm	SHEET 1 OF 1