DIM.	TOL
5mm DOWN	±0.2
5~20mm	±0.3
20~40mm	±0.4
40~60mm	±0.5
60~100mm	±0.8
100mm UP	±1.0

REVISIONS			
REV	DESCRIPTION	DATE	BY

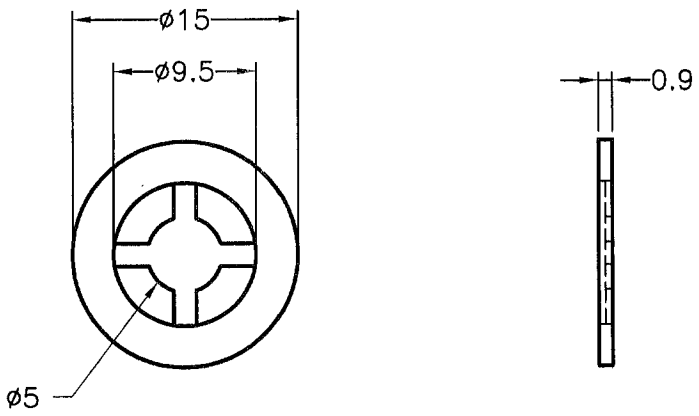

NOTE:All measurement does not include gate which raises under 0.3mm.

PART NO.	COLOR
KWS-5	NATURAL
KWS-5(B)	BLACK

康揚企業股份有限公司
KANG YANG HARDWARE ENTERPRISE CO., LTD.
康揚塑膠(東莞)有限公司
KANG YANG PLASTIC(DONG GUAN)CO.,LTD.
康哲電腦配件(吳江)有限公司
KANG CHE COMPUTER COMPONENTS(WUJIANG) CO.,LTD.
ISO 9001
ISO 14001
QC 080000

TITLE	SCREW WASHER	SPEC. DWG.	
MATERIAL	NYLON 66 UL94V-2	DATE	2007.03.30
HARDNESS		DRAWN	BUNNY
COLOR	SEE ABOVE	CHECK	朱益建
UNLESS OTHERWISE SPECIFIED TOLERANCE	SEE ABOVE	APPROVED	Kang

PART NUMBER	DRAWING NUMBER		
SEE ABOVE	KWS-5		
SIZE A4	SCALE 2:1	UNIT mm	REV B