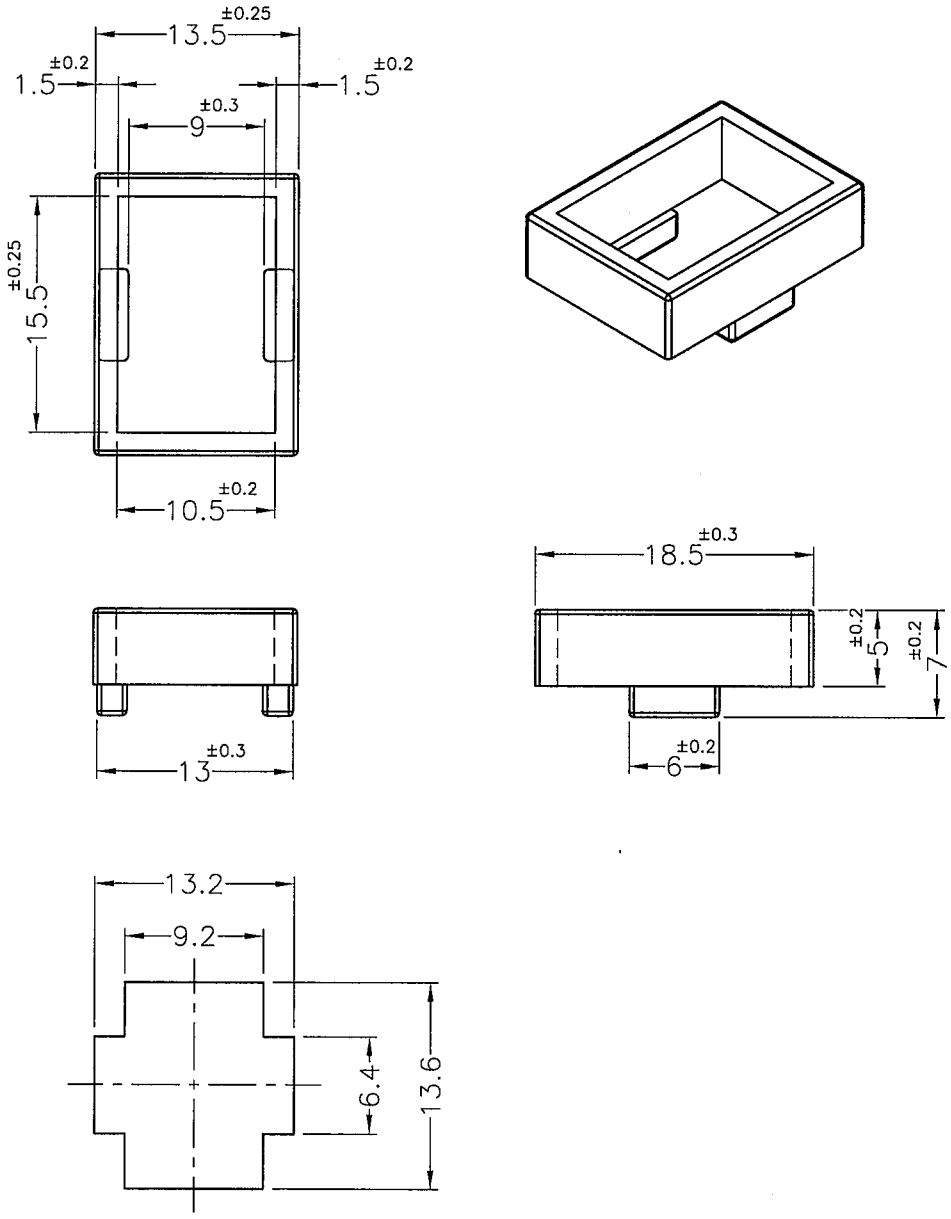


HOLE IN CHASSIS

NOTE: 1. SHRINKING IS NORMAL STATUS.
內縮為正常現象.
2. MADE OF EQUIVALENT MATERIAL.
均可使用同等材質.
3. THE COLOR BATCH TEST REPORT IS ONLY FOR TEST PURPOSE.
色母環保檢測報告,僅提供原始測試報告.

康揚企業股份有限公司
KANG YANG HARDWARE ENTERPRISE CO., LTD.
康揚塑膠(東莞)有限公司
KANG YANG PLASTIC(DONG GUAN)CO.,LTD.
康哲電腦配件(吳江)有限公司
KANG CHE COMPUTER COMPONENTS(WUJIANG)CO.,LTD.
ISO 9001
ISO 14001
QC 080000
IATF 16949

PROPRIETARY AND CONFIDENTIAL
THE INFORMATION CONTAINED IN THIS DRAWING IS THE SOLE PROPERTY OF KANG YANG HARDWARE ENTERPRISE CO. ANY REPRODUCTION IN PART OR AS A WHOLE WITHOUT THE WRITTEN PERMISSION OF KANG YANG HARDWARE ENTERPRISE CO. IS PROHIBITED.

DO NOT SCALE DRAWING

| | | | |
|---|---|---|---|
| DATE 2019.05.09 | TITLE SWITCH COVER | DWG. NO. SCAB-17 | PART NO. SCAB-17V0(B) |
| DRAWN C.S.L | MATERIAL NYLON 66 UL94V-0 | | |
| CHECKED 彭永承 | COLOR BLACK / FINISH | SIZE A4 | SPEC. DWG / REV A |
| APPROVED Kang | UNLESS OTHERWISE SPECIFIED TOLERANCE: SEE ABOVE | SCALE: 2:1 / UNIT mm | SHEET 1 OF 1 |