REVISIONS			
REV	DESCRIPTION	DATE	BY

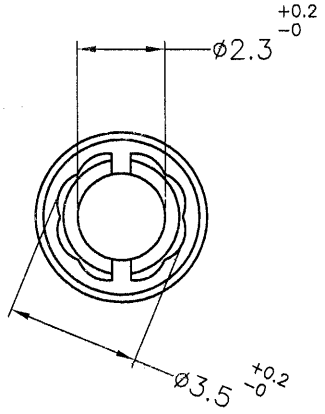

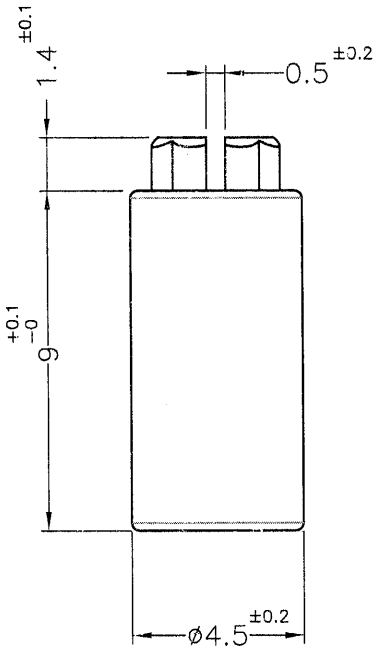

NOTE: MADE OF EQUIVALENT MATERIAL.
均可使用同等材質.

康揚企業股份有限公司
KANG YANG HARDWARE ENTERPRISE CO., LTD.
康揚塑膠(東莞)有限公司
KANG YANG PLASTIC(DONG GUAN)CO.,LTD.
康哲電腦配件(吳江)有限公司
KANG CHE COMPUTER COMPONENTS(WUJIANG) CO.,LTD.
ISO 9001
ISO 14001
QC 080000

TITLE	ROUND SPACER	SPEC. DWG.	
MATERIAL	PBT UL94V-0+GF	DATE	2016.09.19
FINISH		DRAWN	Wei
COLOR	NATURAL(WHITE)	CHECK	薛梅
UNLESS OTHERWISE SPECIFIED TOLERANCE	SEE ABOVE	APPROVED	Kang

PART NUMBER	DRAWING NUMBER		
LUSS-9	LUSS-9		
SIZE A4	SCALE 5:1	UNIT mm	REV A