Patented Under Process
專利申請中

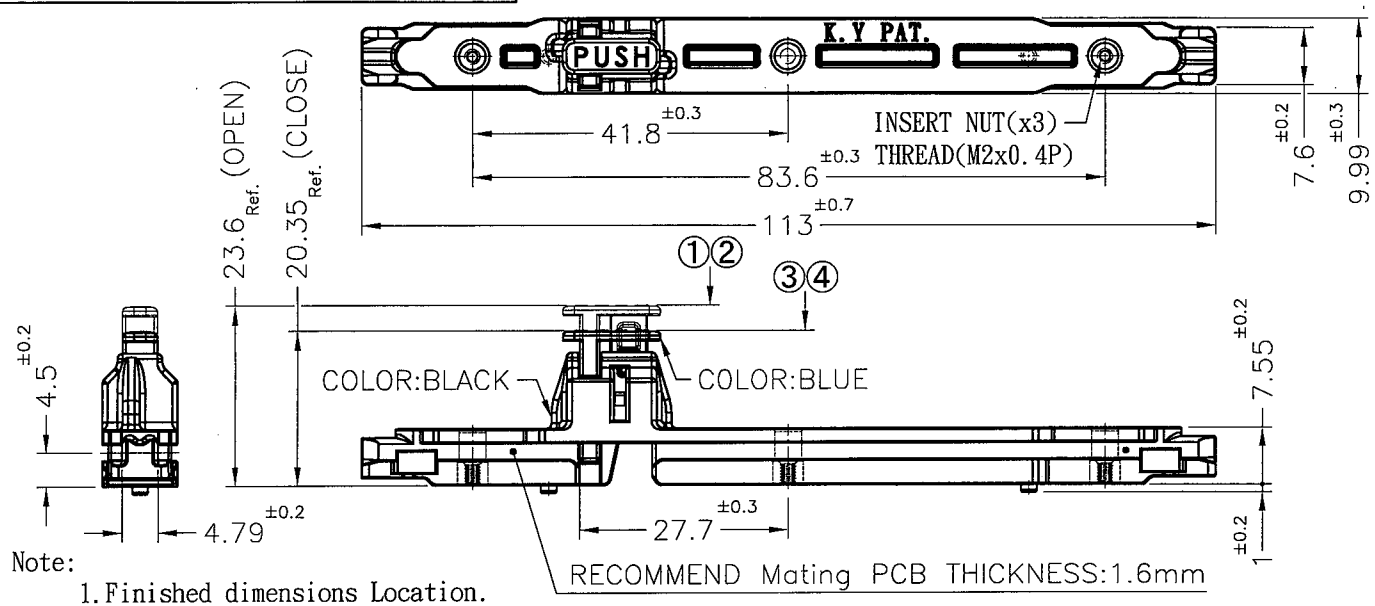


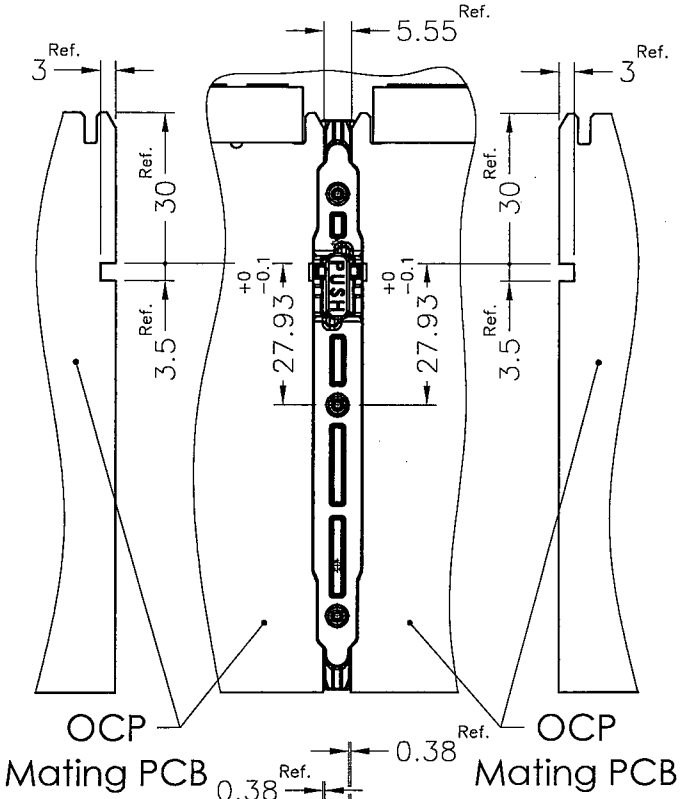


Note:

1. Finished dimensions Location.
   成品尺寸位置.
   ① Minimum press-in distance to lock: 4.3 Ref.
   扣合所需的最小距離位置
   ② Maximum press-in distance to lock: 4.5 Ref.
   扣合時最大壓入位置
   ③ Minimum press-in distance to unlock: 1.1 Ref.
   打開所需的最小距離位置
   ④ Maximum press-in distance to unlock: 1.3 Ref.
   打開時最大壓入位置
2. Made of equivalent material.
   均可使用同等材質.
3. Slight deformed is normal status.
   輕微變形為正常現象.
4. The color batch test report is only for first lot test.
   色母環保檢測報告,僅提供原始測試報告.

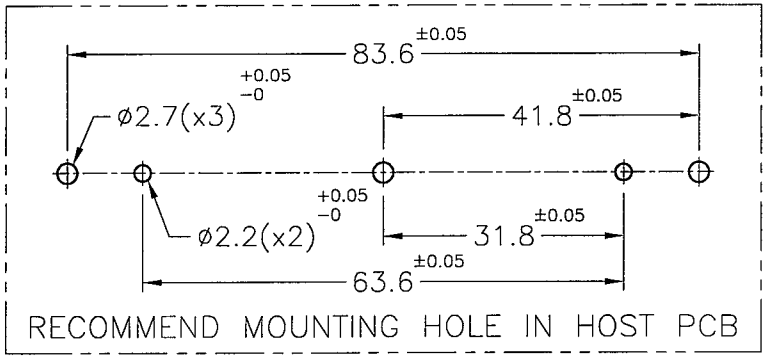


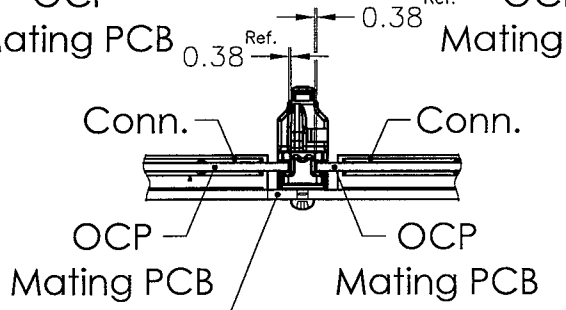


Above Board
Assembly Diagram

| | | | | | |
|---|---|---|---|---|---|
| 康揚企業股份有限公司 KANG YANG HARDWARE ENTERPRISE CO., LTD. 康揚塑膠(東莞)有限公司 KANG YANG PLASTIC(DONG GUAN)CO.,LTD. 康哲電腦配件(吳江)有限公司 KANG CHE COMPUTER COMPONENTS(WUJIANG)CO.,LTD. 康揚塑膠五金(泰國)有限公司 บริษัท คัง หยาง ฮาร์ดแวร์ (ไทยแลนด์) จำกัด KANG YANG HARDWARE (THAILAND) CO., LTD. 康揚越南有限公司 CÔNG TY TNHH KANG YANG VIỆT NAM KANG YANG VIETNAM CO., LTD. ISO 9001 ISO 14001 QC 080000 IATF 16949 | DATE 2025.01.13 | TITLE CARD GUIDE | DWG. NO. CGLP-11F | PART NO. CGLP-11V0F-M2 | |
| | DRAWN K.W | MATERIAL PC+ABS UL94V-0 | | | |
| | CHECKED Kenny | INSERT NUT MATERIAL BRASS | COLOR SEE ABOVE | SIZE A4 | SPEC. DWG | REV A |
| | APPROVED Kang | UNLESS OTHERWISE SPECIFIED TOLERANCE: SEE ABOVE | | SCALE: 1:1 | UNIT mm | SHEET 1 OF 1 |

PROPRIETARY AND CONFIDENTIAL: THE INFORMATION CONTAINED IN THIS DRAWING IS THE SOLE PROPERTY OF KANG YANG HARDWARE ENTERPRISE CO. ANY REPRODUCTION IN PART OR AS A WHOLE WITHOUT THE WRITTEN PERMISSION OF KANG YANG HARDWARE ENTERPRISE IS PROHIBITED. DO NOT SCALE DRAWING