Patented Product
專利產品

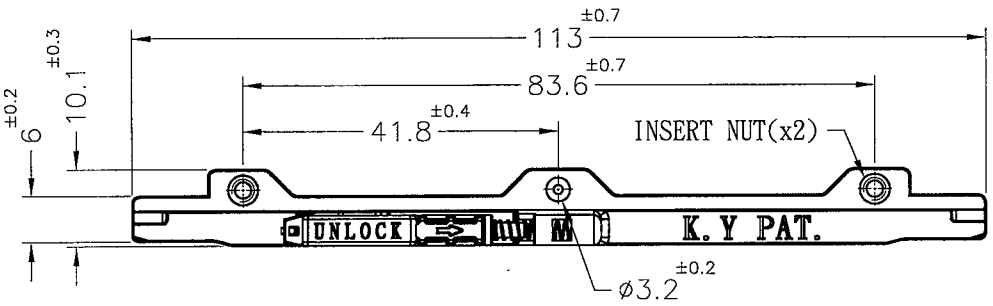

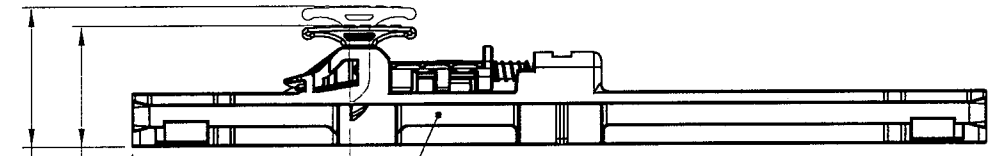

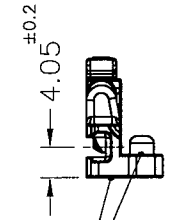

RECOMMEND Mating PCB THICKNESS:1.6mm

RECOMMEND Host PCB THICKNESS:1.6~2.4mm

18.5 Min. (OPEN)
16 Ref. (CLOSE)

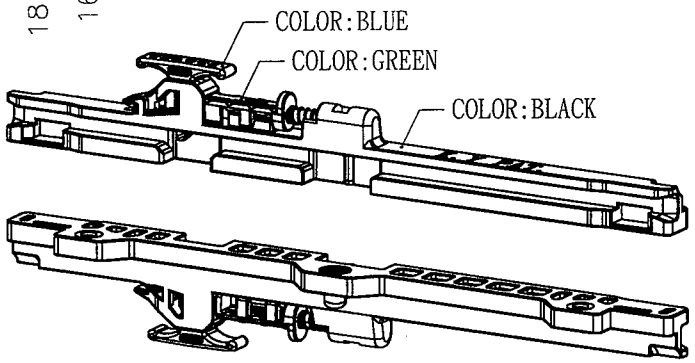

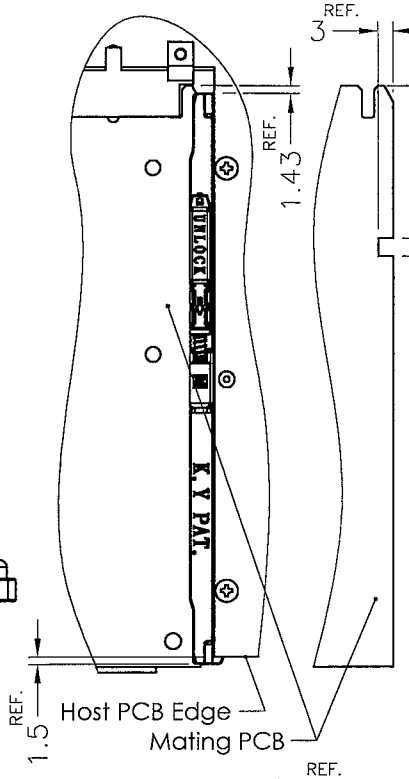

Middle Board Assembly Diagram

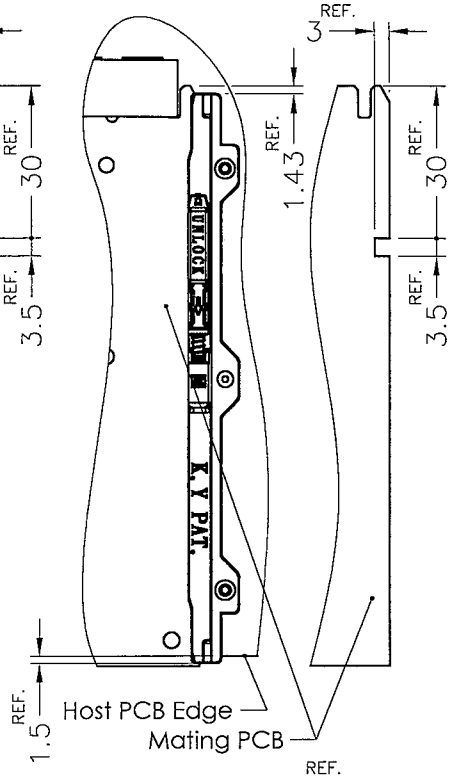

Above Board Assembly Diagram

NOTE: 1. MADE OF EQUIVALENT MATERIAL.
均可使用同等材質.
2. SLIGHT DEFORMED IS NORMAL STATUS.
輕微變形為正常現象.
3. THE COLOR BATCH TEST REPORT IS ONLY FOR TEST PURPOSE.
色母環保檢測報告,僅提供原始測試報告.

PART NO.	THREAD
CGLP-3V0F	M3x0.5P
CGLP-3V0F-M2	M2x0.4P

康揚企業股份有限公司
KANG YANG HARDWARE ENTERPRISE CO., LTD.
康揚塑膠(東莞)有限公司
KANG YANG PLASTIC(DONG GUAN)CO.,LTD .
康哲電腦配件(吳江)有限公司
KANG CHE COMPUTER COMPONENTS(WUJIANG)CO.,LTD.
康揚塑膠五金(泰國)有限公司
บริษัท คัง หยาง ฮาร์ดแวร์ (ไทยแลนด์) จำกัด
KANG YANG HARDWARE (THAILAND) CO., LTD.
康揚越南有限公司
CÔNG TY TNHH KANG YANG VIỆT NAM
KANG YANG VIETNAM CO., LTD.

ISO 9001
ISO 14001
QC 080000
IATF 16949

DATE 2020.04.21	TITLE CARD GUIDE	DWG. NO. CGLP-3F	PART NO. SEE ABOVE
DRAWN K.W	BODY MATERIAL PC+ABS UL94V-0		
CHECKED Kenny	SPRING MATERIAL SUS	SIZE A4	SPEC. DWG	REV E
APPROVED Kang	UNLESS OTHERWISE SPECIFIED TOLERANCE: SEE ABOVE	SCALE: 1:1	UNIT mm	SHEET 1 OF 1

PROPRIETARY AND CONFIDENTIAL : THE INFORMATION CONTAINED IN THIS DRAWING IS THE SOLE PROPERTY OF KANG YANG HARDWARE ENTERPRISE CO. ANY REPRODUCTION IN PART OR AS A WHOLE WITHOUT THE WRITTEN PERMISSION OF KANG YANG HARDWARE ENTERPRISE IS PROHIBITED.
DO NOT SCALE DRAWING