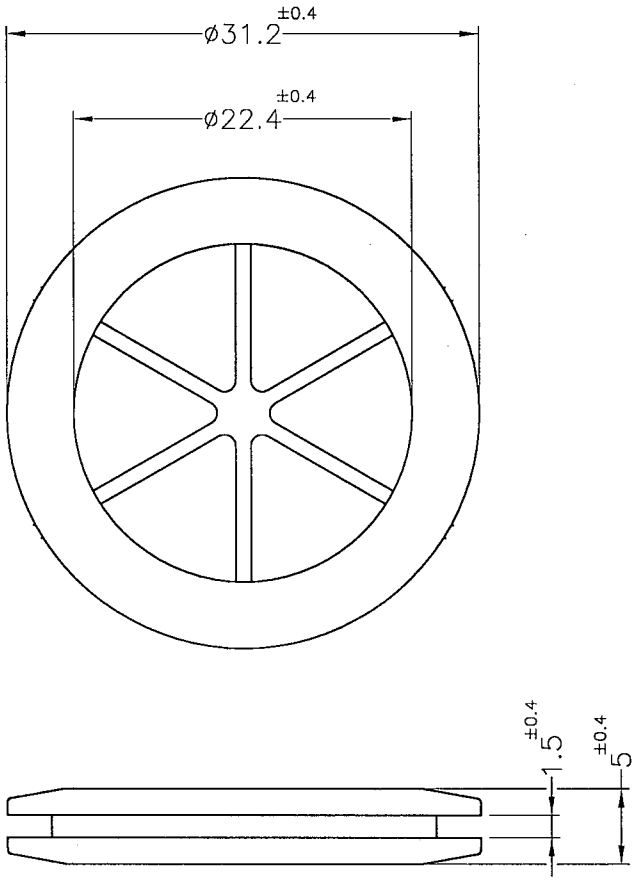

MOUNTING HOLE: ø25.4mm
(RECOMMEND FOR REFERENCE ONLY)

NOTE:SHRINKING IS NORMAL STATUS.
內縮為正常現象.

康揚企業股份有限公司
KANG YANG HARDWARE ENTERPRISE CO., LTD.
康揚塑膠(東莞)有限公司
KANG YANG PLASTIC(DONG GUAN)CO.,LTD .
康哲電腦配件(吳江)有限公司
KANG CHE COMPUTER COMPONENTS(WUJIANG)CO.,LTD.
康揚塑膠五金(泰國)有限公司
บริษัท คัง หยาง ฮาร์ดแวร์ (ไทยแลนด์) จำกัด
KANG YANG HARDWARE (THAILAND) CO., LTD.
康揚越南有限公司
CÔNG TY TNHH KANG YANG VIỆT NAM
KANG YANG VIETNAM CO., LTD.

ISO 9001
ISO 14001
QC 080000
IATF 16949

PROPRIETARY AND CONFIDENTIAL
THE INFORMATION CONTAINED IN THIS DRAWING IS THE SOLE PROPERTY OF KANG YANG HARDWARE ENTERPRISE CO. ANY REPRODUCTION IN PART OR AS A WHOLE WITHOUT THE WRITTEN PERMISSION OF KANG YANG HARDWARE ENTERPRISE CO. IS PROHIBITED.

DO NOT SCALE DRAWING

DATE: 2007.11.02	TITLE: RUBBER GROMMET		DWG. NO.: DGB-25	PART NO.: DGB-25
DRAWN: BUNNY	MATERIAL: RUBBER(NR)			
CHECKED: Yuping	COLOR: BLACK	FINISH:	SIZE: A4	SPEC. DWG.	REV: A
APPROVED: Kang	UNLESS OTHERWISE SPECIFIED TOLERANCE: SEE ABOVE		SCALE: 2:1	UNIT: mm	SHEET 1 OF 1