PART No	D1 + D2	L	H	P1	P2
HTSM -M2-L-4-2	M2	5	4	5	3
		6			4
		8			5
		10/12/15/18/20/25/30/35/40/45/50			6
HTSM-M2.5-L-4-2	M2.5	5		6	3
		6			4
		8			5
		10			6
		12			7
		15/18/20/25/30/35/40/45/50			10
HTSM-M2.5-L-5-2		5	5		3
		6			4
		8			5
		10			6
		12			7
		15/18/20/25/30/35/40/45/50/55/60			10
HTSM-M3-L-5-2	M3	5			3
		6			4
		8			5
		10			6
		12			7
		15/18/20/25/30/35/40/45/50/55/60			10
HTSM-M3-L-5-2-L		5		8	3
		6			4
		8			5
		10			6
		12			7
		15/18/20/25/30/35/40/45/50/55/60			10
HTSM-M3-L-5.5-2		5	5.5	6	3
		6			4
		8			5
		10			6
		12			7
		15/18/20/25/30/35/40/45/50/55/60/65/70			10
HTSM-M3-L-5.5-2-L		5		8	3
		6			4
		8			5
		10			6
		12			7
		15/18/20/25/30/35/40/45/50/55/60/65/70			10
HTSM-M4-L-7-2	M4	5	7		3
		6			4
		8			5
		10			6
		12			7
		15/18/20/25/30/35/40/45/50/55/60/65/70/75/80/85/90/95/100			10
HTSM-M5-L-8-2	M5	8	8		5
		10			6
		12			7
		15/18/20/25/30/35/40/45/50/55/60/65/70/75/80/85/90/95/100			10
HTSM-M6-L-10-2	M6	10	10	10	6
		12			7
		15/18			10
		15/18/20/25/30/35/40/45/50/55/60/65/70/75/80/85/90/95/100			12

REV.	MODIFICATION.	DATE	DRN

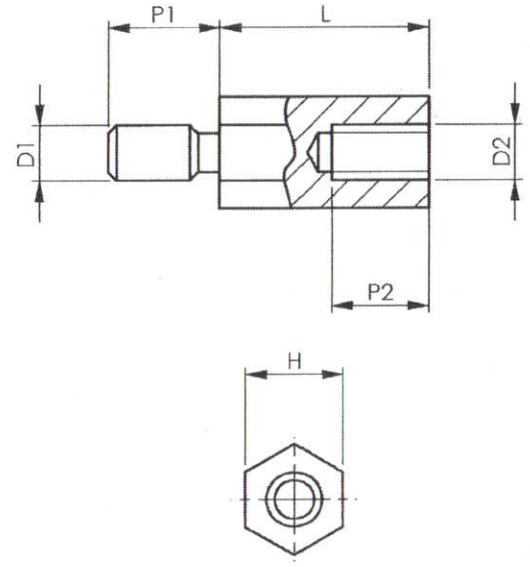

INFORMATION CONTAINED IN THIS DOCUMENT IS CONFIDENTIAL TO KANGANONT LTD. Co. AND MAY NOT BE DISCLOSED OR REPRODUCED IN WHOLE OR PART WITHOUT THEIR WRITTEN CONSENT.

康揚企業股份有限公司
KANG YANG KANGYANG ENTERPRISE CO., LTD.
康揚塑膠(東莞)有限公司
KANG YANG PLASTIC(DONG GUAN) CO.,LTD.
康哲電腦配件(吳江)有限公司
KANG CHE COMPUTER COMPONENTS(WUJIANG) CO.,LTD.

ALL DIMENSIONS IN mm
GENERAL TOLERANCES ±0.25
UNLESS OTHERWISE STATED
1 DECIMAL PLACE ±
2 DECIMAL PLACES ±
ANGULAR ±1°

THIRD ANGLE

MATERIAL: STEEL
GALVANIZED (A3F)

COLOUR:

DESCRIPTION:
HEXAGONAL STEEL STANDOFF

PART No:
See Table

DRG No:

NPR No:

SHEET SIZE A4

DRN	DATE	CHKD	DATE	SCALE	SHEET No.
TC	04/09/13	JK	17/09/13	NTS	1 OF 1