Patented Under Process
專利申請中

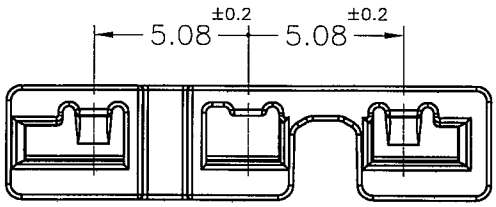

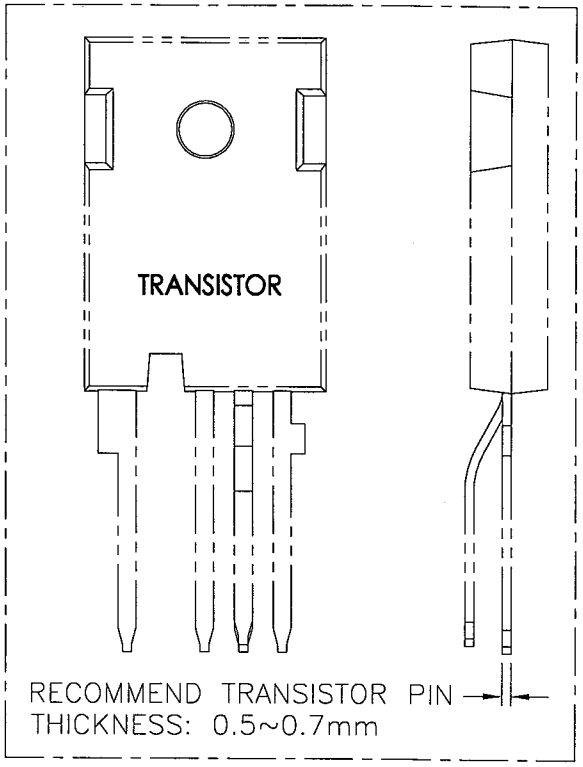

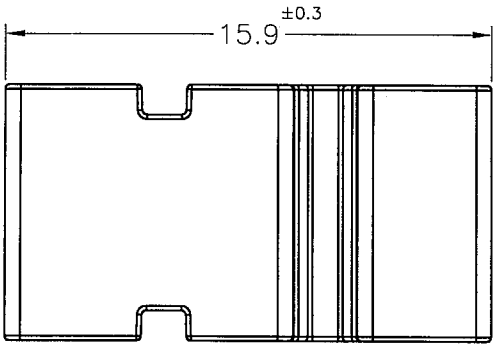

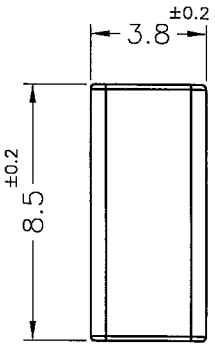

NOTE: 1. MADE OF EQUIVALENT MATERIAL.
均可使用同等材質.
2. SLIGHT DEFORMED IS NORMAL STATUS.
輕微變形為正常現象.
3. THE COLOR BATCH TEST REPORT IS ONLY FOR FIRST LOT TEST.
色母環保檢測報告,僅提供原始測試報告.

ISO 9001
ISO 14001
QC 080000
IATF 16949

康揚企業股份有限公司
KANG YANG HARDWARE ENTERPRISE CO., LTD.
康揚塑膠(東莞)有限公司
KANG YANG PLASTIC(DONG GUAN)CO.,LTD .
康哲電腦配件(吳江)有限公司
KANG CHE COMPUTER COMPONENTS(WUJIANG)CO.,LTD.

康揚塑膠五金(泰國)有限公司
บริษัท คัง หยาง ฮาร์ดแวร์ (ไทยแลนด์) จำกัด
KANG YANG HARDWARE (THAILAND) CO., LTD.
康揚越南有限公司
CÔNG TY TNHH KANG YANG VIỆT NAM
KANG YANG VIETNAM CO., LTD.

PROPRIETARY AND CONFIDENTIAL
THE INFORMATION CONTAINED IN THIS DRAWING IS THE SOLE PROPERTY OF KANG YANG HARDWARE ENTERPRISE CO. ANY REPRODUCTION IN PART OR AS A WHOLE WITHOUT THE WRITTEN PERMISSION OF KANG YANG HARDWARE ENTERPRISE CO. IS PROHIBITED.
DO NOT SCALE DRAWING

DATE 2025.11.05	TITLE TRANSISTOR HOUSING		DWG. NO. TRW3-9	PART NO. TRW3-9V0
DRAWN K.W	MATERIAL NYLON 66 UL94V-0			
CHECKED Kenny	COLOR NATURAL	FINISH	SIZE A4	SPEC. DWG REV A
APPROVED kang	UNLESS OTHERWISE SPECIFIED TOLERANCE: SEE ABOVE		SCALE: 4:1	UNIT mm SHEET 1 OF 1